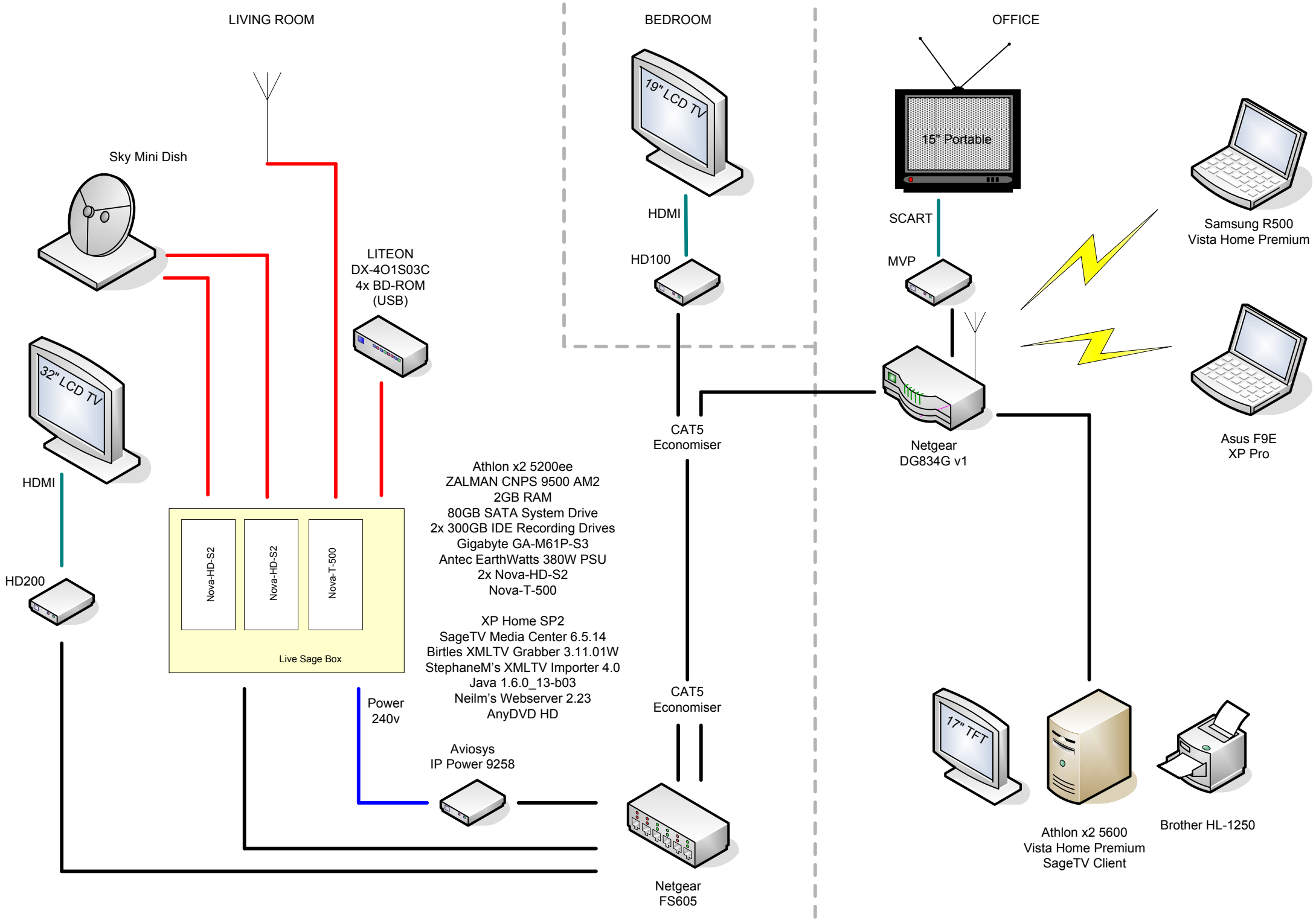
LIVING ROOM
BEDROOM
OFFICE
Sky Mini Dish
LITEON
DX-4O1S03C
4x BD-ROM
(USB)
32" LCD TV
HDMI
HD200
Nova-HD-S2
Nova-HD-S2
Nova-T-500
Live Sage Box
Power
240v
Athlon x2 5200ee
ZALMAN CNPS 9500 AM2
2GB RAM
80GB SATA System Drive
2x 300GB IDE Recording Drives
Gigabyte GA-M61P-S3
Antec EarthWatts 380W PSU
2x Nova-HD-S2
Nova-T-500
XP Home SP2
SageTV Media Center 6.5.14
Birtles XMLTV Grabber 3.11.01W
StephaneM's XMLTV Importer 4.0
Java 1.6.0_13-b03
Neilm's Webserver 2.23
AnyDVD HD
Aviosys
IP Power 9258
19" LCD TV
HDMI
HD100
CAT5
Economiser
CAT5
Economiser
Netgear
FS605
15" Portable
SCART
MVP
Netgear
DG834G v1
Samsung R500
Vista Home Premium
Asus F9E
XP Pro
17" TFT
Athlon x2 5600
Vista Home Premium
SageTV Client
Brother HL-1250